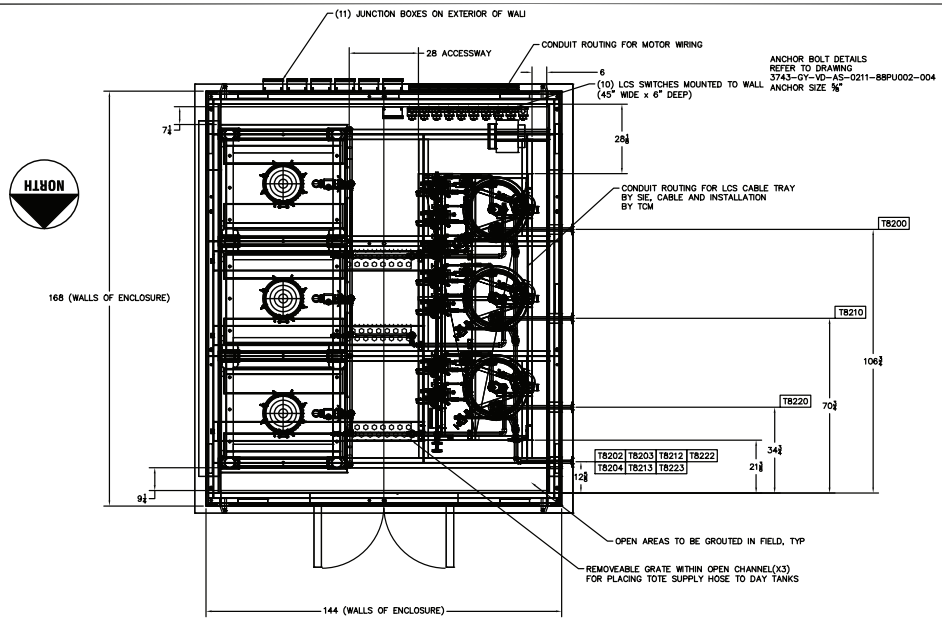

CONNECTION TABLE LIST		
CONNECTION NUMBER	CONNECTION SIZE & TYPE	CONNECTION NAME
T8200	2" 150# FF FLANGE, PVC	TANK ADDITION CONNECTION
T8210	2" 150# FF FLANGE, PVC	TANK ADDITION CONNECTION
T8220	2" 150# FF FLANGE, PVC	TANK ADDITION CONNECTION

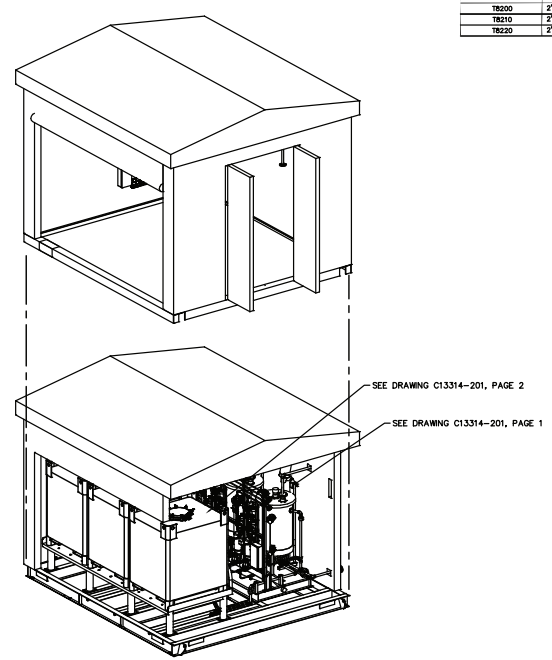

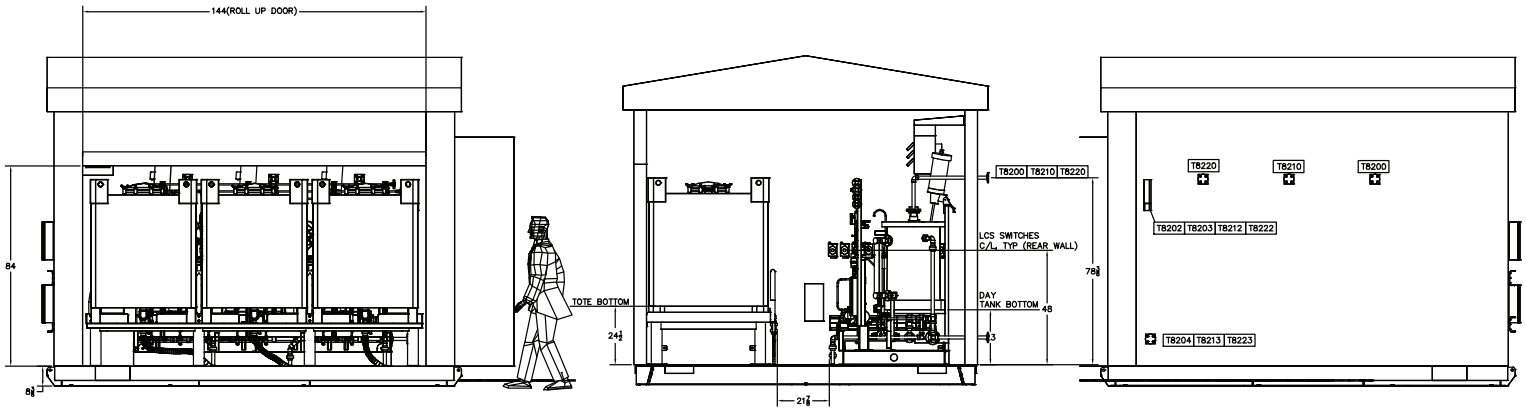

NOTES:

1.) UNLESS OTHERWISE SPECIFIED ALL DIMENSIONS ARE IN INCHES. DIMENSIONS IN BRACKETS INDICATE MILLIMETERS.

2.) DIMENSIONS ENCLOSED WITHIN PARENTHESES INDICATE REFERENCE.

3.) ALL FRAME MATERIAL A-36 CARBON STEEL HOT DIPPED GALVANIZED COATING.

4.) OVERALL SKID FOOTPRINTS MAY VARY UP TO 6" AROUND PERIMETER.

5.) APPROXIMATE SKID WEIGHT:
ENCLOSURE: 6,000 LBS
LOWER ENCLOSURE FRAME: 2,500

6.)PIPE CONNECTIONS +/-1" IN ALL DIMENSIONS.

7.) DO NOT SCALE DRAWING.

SUPERIOR INDUSTRIAL EQUIPMENT
C13314-201-PAGE 3 of 3 82-PU-002, 003, 004

ISSUE Em.	DESCRIPTION – Description	DRAWN UP Compil.	CHK'D Verific.	APP'D Approv.	DATE Date
4	REVISED	SV	GM	KB	04/14/14
3	REVISED	SV	GM	KB	03/24/14
2	UPDATED PER CUSTOMER REQUEST	SV	GM	KB	02/13/14
1	RELEASED FOR APPROVAL	SV	GM	KB	01/03/14

THIS DOCUMENT IS TECHNICAL'S PROPERTY AND CANNOT BE USED BY OTHERS FOR ANY PURPOSE, WITHOUT PRIOR WRITTEN CONSENT

Questa documento e' proprieta' di Tecnimont e non puo' essere utilizzato in alcun modo da terzi senza preventiva autorizzazione

TCM IDENTIFICATION CODE
Codice Identificazione
Job-ID-Type-#
3743-GY-VD-LG0211B2PU002001

ISSUE Em. 5

Acceptance Status Code	Discipline abbreviation	Checker N. Surname	Checker Signature	Date

Acceptance Status description:
A Accepted
AC Accepted with Comment Resubmit
CR Commented-Resubmit for Acceptance
NA Not Accepted, Resubmit

BUYER's acceptance of this Document does in no way relieve the VENDOR of his contractual obligations

ISSUE Em.	DESCRIPTION – Description	DRAWN UP Compil.	CHK'D Verific.	APP'D Approv.	DATE Date
5	FINAL REVISION	SV	GM	KB	06/25/14

TITLE – Titolo
NEW AMMONIA UREA PLANT
BOILER CHEMICAL FEED PACKAGES
GENERAL ARRANGEMENT

PLANT – Impianto: Ammonia & Urea Fertilizer Project

ORIG. SCALE – Scale orig.: DO NOT SCALE

GRAPHIC SCALE – Scale grafica: 0 m

CLIENT REF. – Rif. Cliente